RETENTION & DETENTION SYSTEM CLEANOUT/RISER

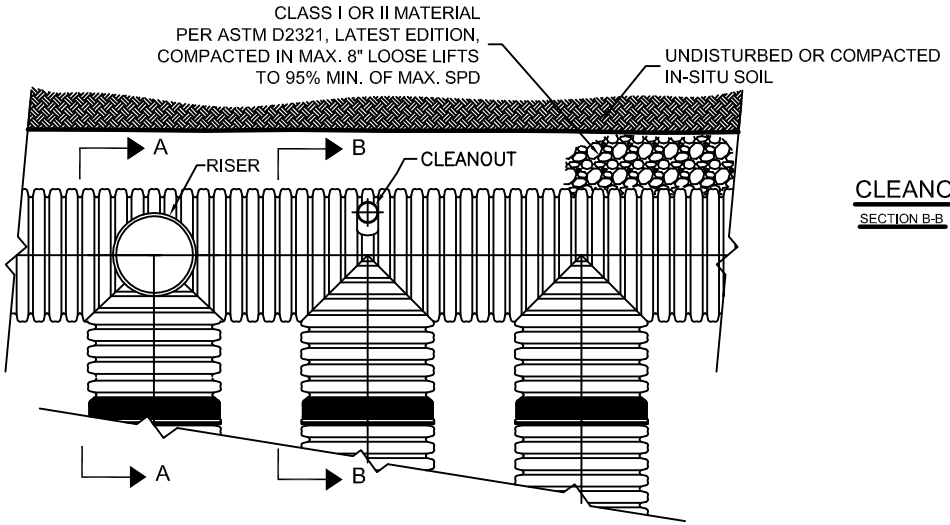

RISER DETIAL

SECTION A-A

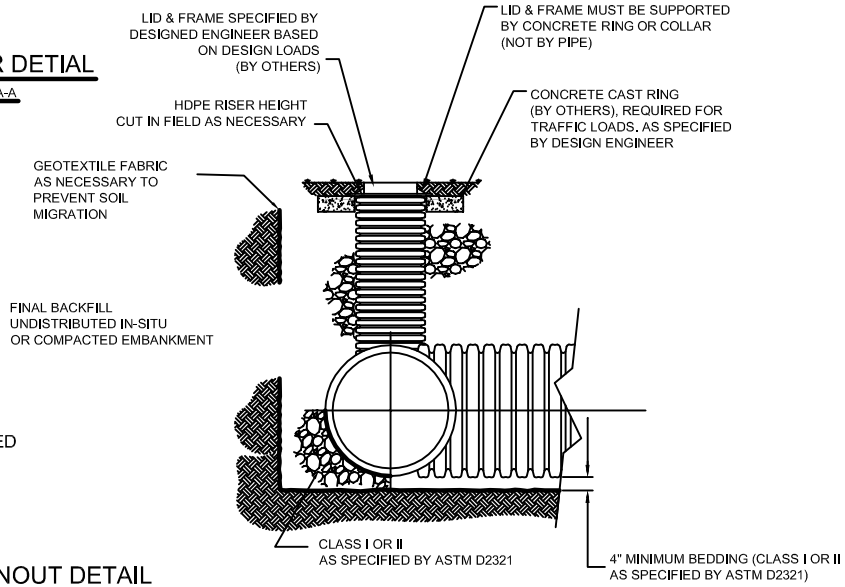

CLEANOUT DETAIL

SECTION B-B

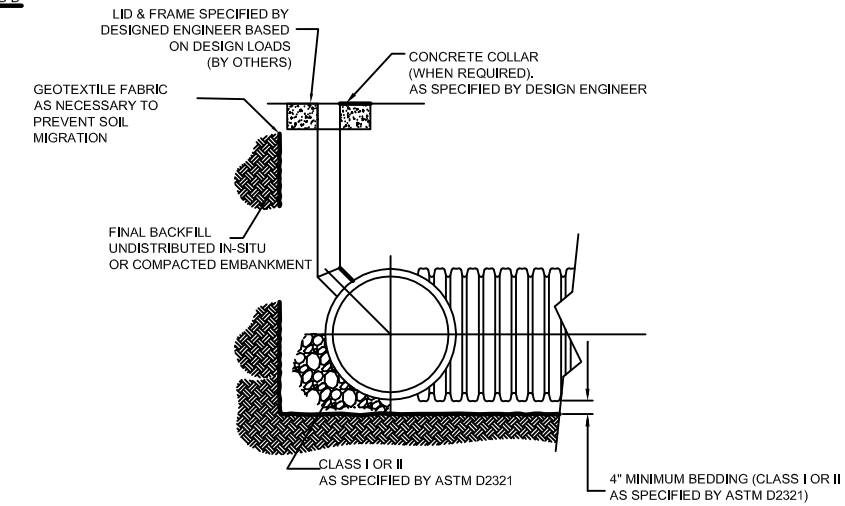

NOTES:

1. DRAWING NOT TO SCALE.

JM Eagle

Building essentials for a better tomorrow

5200 W CENTURY BLVD. LOS ANGELES, CA, 90045

www.jmeagle.com 310.693.8200

DRAWING NO:	JME 0323	RET/DET SYSTEM COMPONENTS	
ACTION		INITIALS	DATE
DRAWN BY		TRT	01.24.2010
APPROVED BY		DED	
REVISION		INITIALS	
1.		MWO	
-			
-			
-			